KEYENCE

NEW **Ultra-compact 1D and 2D Code Reader**

SR-700 Series

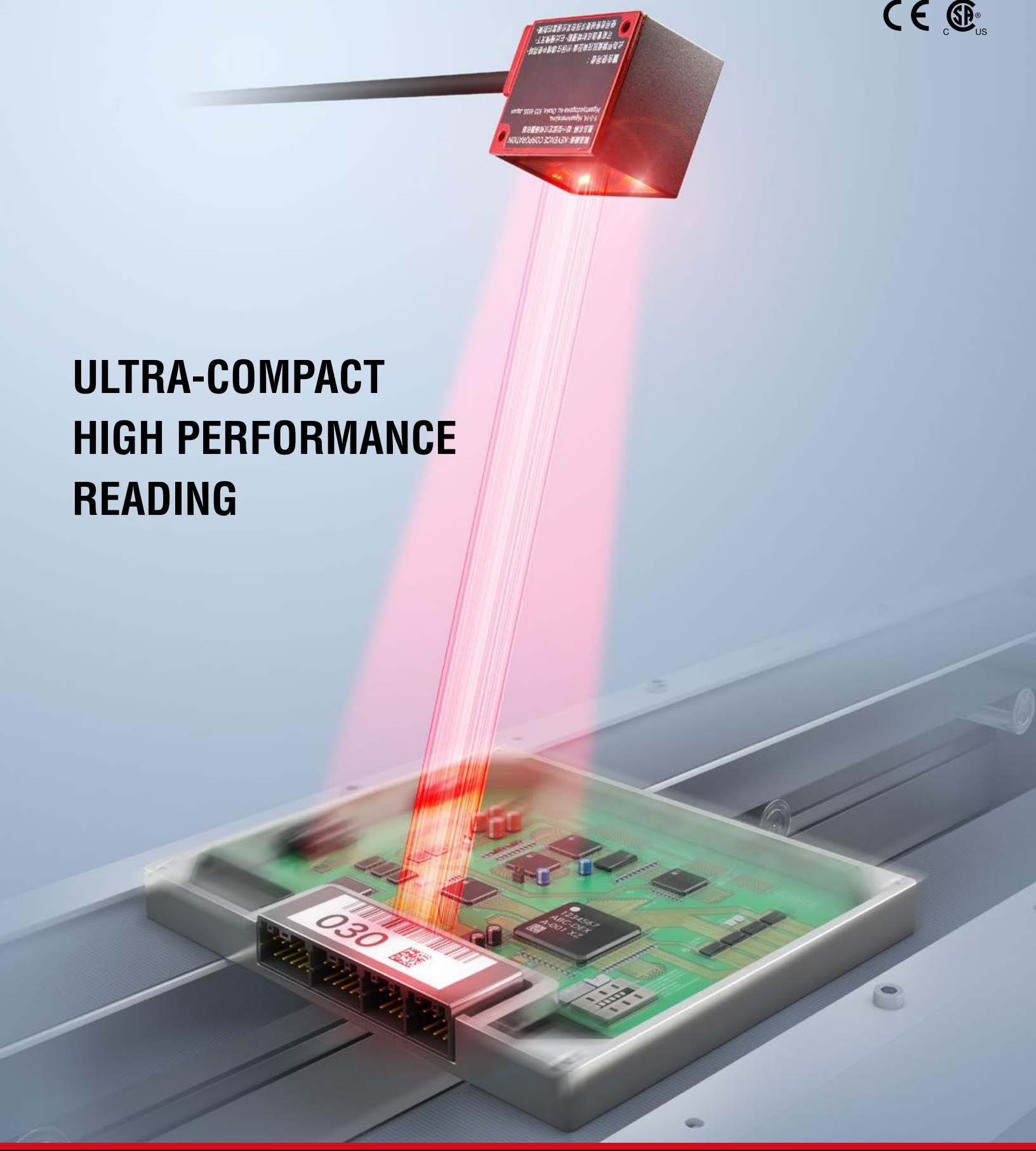

ULTRA-COMPACT HIGH PERFORMANCE READING

SR-700 Series

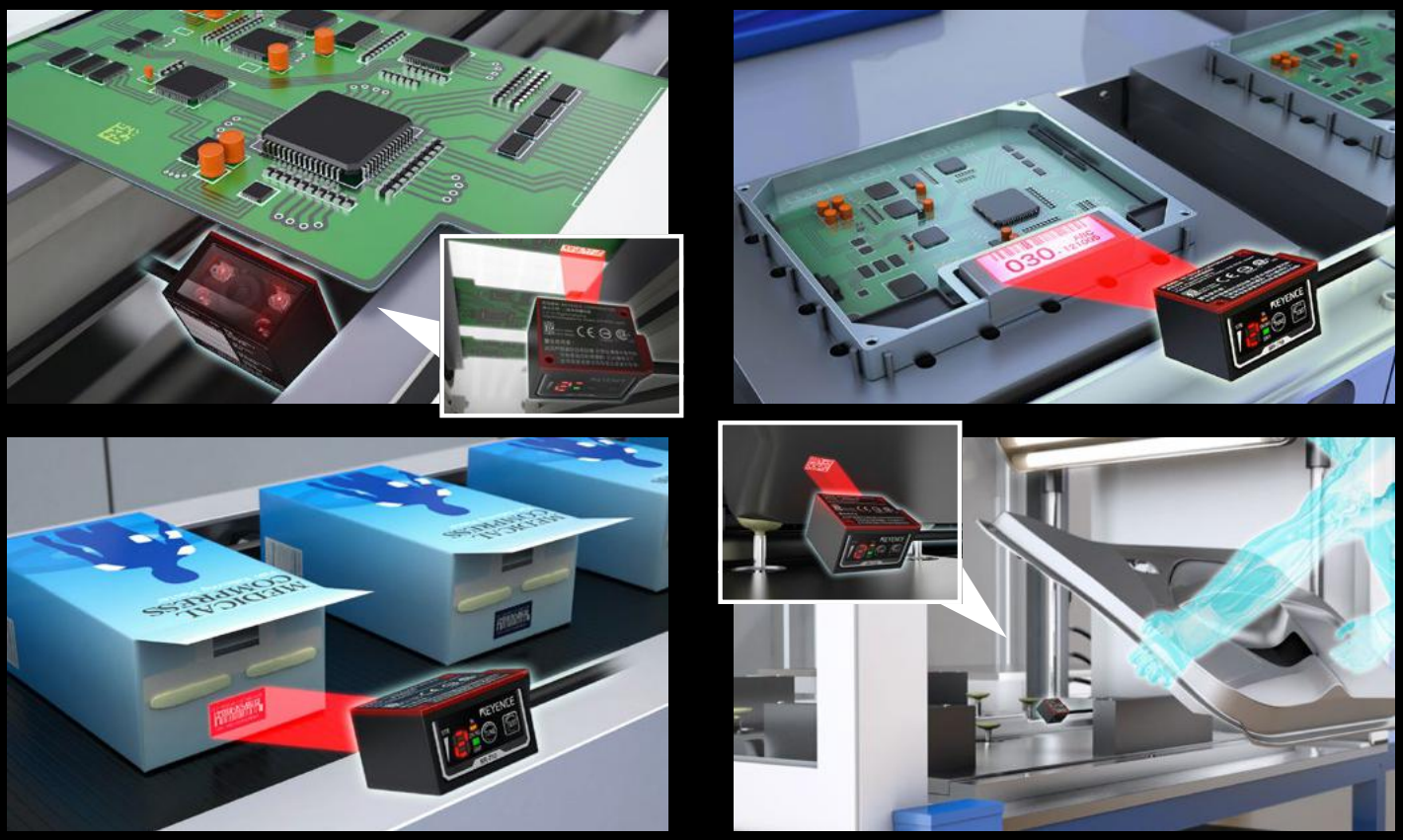

C O M P A C T B O D Y

ADVANCED PROCESSING FOR STABLE, HIGH-QUALITY READING

EXCELLENT READING CAPABILITY THROUGHOUT THE FIELD OF VIEW

A built-in lens minimizes aberration to ensure stable reading even at the edges of the field of view.



READING UNAFFECTED BY MOUNTING ANGLE

Geometric correction enables reliable code reading even when the code appears distorted.



EASILY READ DAMAGED OR IRREGULARLY PRINTED CODES

New algorithms provide best-in-class reading capability even when the code is hard to read.



POWERFUL HIGH SPEED READING

BURST READ FUNCTION:

Acquires up to 10 consecutive images. The decoding process is performed after imaging for high speed code detection.

HIGH-SPEED IMAGE CAPTURE:

The built-in ultra-high-intensity LED and high-speed digital signal processor (DSP) capture moving objects effectively, even with a short exposure time. (Reference: Max. 170 m/min with a KEYENCE test label)

EASY TUNING

Easily optimize reading settings

The optimal brightness and filter settings are automatically selected using the buttons on the main unit.



Tuning is also available through the setting software.
SR-H6W

CODE VERIFICATION FUNCTION

Verification based on code quality standards

OUTPUT DATA **AD-ERMT-55841:B**

TOTAL GRADE JUDGMENT

Judgment can also be performed for each grading criteria

*This function is designed for 2D codes (QR, DataMatrix, GS1 Composite, PDF417).

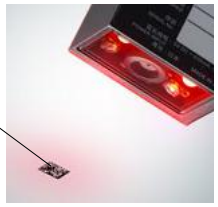

SUPPORTED STANDARDS	• ISO/IEC 15415	• ISO/IEC TR 29158(AIM DPM-1-2006)	
	• ISO/IEC 16022	• SAE AS9132	• SEMI T10-0701

BUILT-IN TEST MODE

Visual indication of reading success

Pressing the TEST button starts the reading rate measurement mode.



MATCHING LEVEL JUDGMENT FUNCTION

Compare the print quality of scanned codes

Higher contrast and print quality are indicated by a larger matching level, as shown below:

Reading rate	100%
Matching level	75

Reading rate	100%
Matching level	43

SYSTEM CONFIGURATION DIAGRAM

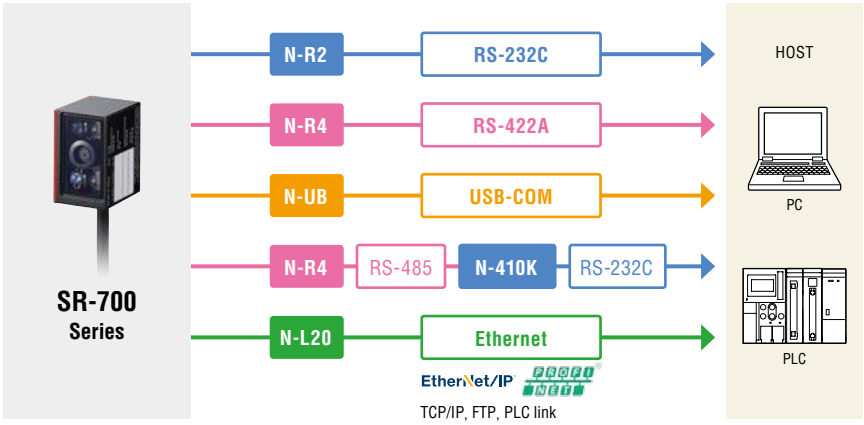

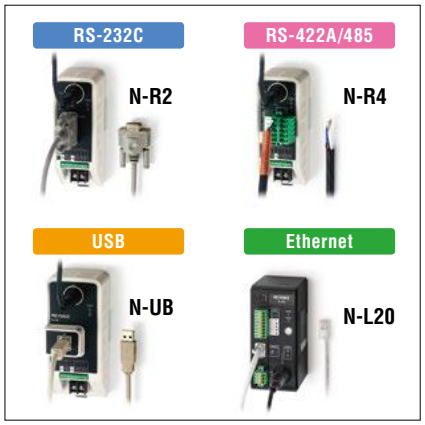

READING RANGE CHARACTERISTICS [TYPICAL]

SR-700HA: HIGH-RESOLUTION TYPE

Code type	Cell size	A	B
2D	0.08 0.003"	31 1.22"	39 1.54"
	0.127 0.005"	27 1.06"	42 1.66"
	0.25 0.010"	22 0.87"	50 1.97"

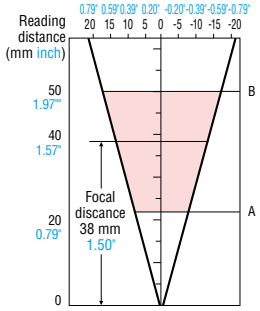

SR-700: CLOSE-RANGE TYPE

Code type	Cell size Narrow bar width	A	B
2D	0.127 0.005"	50 1.97"	70 2.76"
	0.25 0.010"	40 1.57"	80 3.15"
Barcode	0.127 0.005"	46 1.81"	74 2.91"
	0.33 0.013"	30 1.18"	100 3.94"

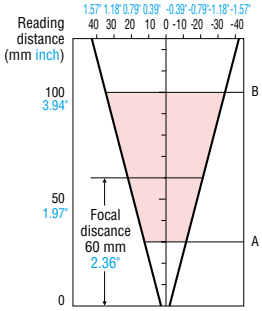

SR-710: MIDDLE-RANGE TYPE

Code type	Cell size Narrow bar width	A	B
2D	0.25 0.010"	65 2.56"	130 5.12"
	0.5 0.020"	45 1.77"	165 6.50"
Barcode	0.127 0.005"	75 2.95"	110 4.33"
	0.5 0.020"	45 1.77"	195 7.68"

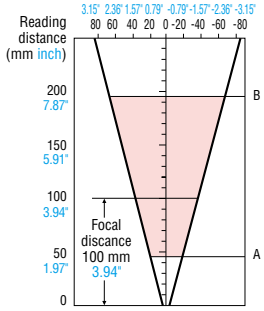

SPECIFICATIONS

Main unit

Model			SR-700HA	SR-700	SR-710
Type			High-resolution type	Close-range type	Middle-range type
Laser pointer	Light source		Visible semiconductor laser (Wavelength: 660 nm)		
	Output		60 µW		
	Pulse duration		200 µs		
	Laser class		Class 1 Laser Product (IEC60825-1, FDA (CDRH) Part 1040.10*1)		
Lighting	Light source		High intensity red LED		
Reading	Supported code	Barcode	*2	CODE39, ITF, 2of5 (Industrial 2of5), COOP 2of5, NW-7 (Codabar), CODE128, GS1-128, GS1 DataBar, CODE93, JAN/EAN/UPC, Trioptic CODE39, CODE39 Full ASCII, Pharmacode	
		2D code	QR, MicroQR, DataMatrix (ECC200), GS1 DataMatrix, PDF417, MicroPDF417, GS1 Composite (CC-A, CC-B, CC-C)		
	Minimum resolution	Barcode	–	0.127 mm 0.005"	0.127 mm 0.005"
		2D code	0.082 mm 0.003"	0.127 mm 0.005"	0.19 mm 0.008"
	Reading distance (typical examples)	Barcode	–	30 to 100 mm 1.18" to 3.94" (Narrow bar width = 0.33 mm 0.01")	45 to 195 mm 1.77" to 7.68" (Narrow bar width = 0.5 mm 0.02")
		2D code	22 to 50 mm 0.87" to 1.97" (Cell size = 0.25 mm 0.01")	40 to 80 mm 1.57" to 3.15" (Cell size = 0.25 mm 0.01")	45 to 165 mm 1.77" to 6.50" (Cell size = 0.5 mm 0.02")
	Focal distance		38 mm 1.50"	60 mm 2.36"	100 mm 3.94"
	Field of view (Typical example at focal distance)		26 mm × 17 mm 1.02" × 0.67"	42 mm × 27 mm 1.65" × 1.06"	70 mm × 45 mm 2.76" × 1.77"
I/O	Control input		2 inputs (IN1 and IN2), non-voltage input (contact, solid-state)		
	Control output		4 NPN open collector outputs (OUT1 to 4) 30 mA or less (24 V or less) Residual voltage 0.8 V or less, leakage current 0.1 mA or less		
	RS-232C	Transmission speed	9600, 19200, 38400, 57600, 115200 bps		
		Supported protocol	No-protocol, MC protocol, SYSWAY, KV STUDIO		
	USB		USB 2.0 Full Speed compliant		
Environmental resistance	Enclosure rating		IP65		
	Ambient temperature		0 to +45°C 32 to 113 °F		
	Ambient storage temperature		-10 to +50°C 14 to 122 °F (No freezing)		
	Relative humidity		35 to 95% RH (No condensation)		
	Ambient luminance		Sunlight: 10000 lux, Incandescent lamp: 6000 lux, Fluorescent lamp: 2000 lux		
	Operating environment		No dust or corrosive gas present		
	Vibration		10 to 55 Hz Double amplitude 1.5 mm 0.06", 3 hours each in X, Y and Z directions		
Rating	Power voltage		5 VDC +5%, -10%		
	Current consumption		630 mA or less		
Weight			Approx. 160 g (including cable)		

*1 The laser classification for FDA (CDRH) is implemented based on IEC60825-1 in accordance with the requirements of Laser Notice No.50.
*2 Barcodes which fit into the visual field can be read.

Communication unit

Model		N-R2	N-R4	N-UB	N-L20
Interface		RS-232C	RS-422A/485	USB-COM	Ethernet*
Code reader power supply		5 VDC ±5%, (650 mA)			
Terminal block	Input	2 inputs (IN1 and IN2)/Input type: Bidirectional voltage input/Maximum input voltage rating: 26.4 VDC/ Minimum ON voltage: 15 VDC/Maximum OFF current: 1 mA			
	Output	4 outputs (OUT1 to 4)/Output type: Photo MOS relay output/Output rated load: 30 VDC, 100 mA/ Leakage current when OFF: 0.1 mA or less/Residual voltage when ON: 1 V or less			
Environmental resistance	Ambient temperature/Relative humidity	0 to +50°C/35 to 85% RH (No condensation)			
	Ambient storage temperature	-20 to +60°C -4 to 140 °F			
	Operating environment	No dust or corrosive gas present			
	Vibration	10 to 55 Hz Double amplitude 1.5 mm 0.06"(N-L20: 0.3 mm 0.01"), 2 hours each in X, Y and Z directions			
Rating		Power voltage: 24 VDC (+10%, -20%)/Current consumption: 380 mA max.			
Weight		Approx. 135 g	Approx. 135 g (excluding connector)	Approx. 155 g	Approx. 150 g

*Supported protocol: TCP, UDP, FTP, BOOTP, EtherNet/IP™, PROFINET, KV STUDIO, MC protocol, OMRON PLC link.

DIMENSIONS

Unit: mm inch

MAIN UNIT
SR-700/710/700HA

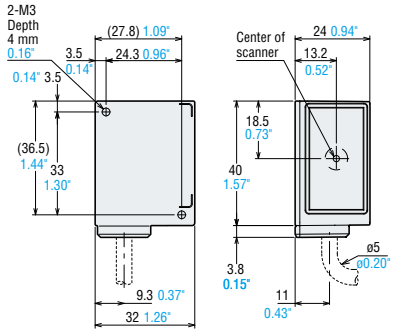

MOUNTING BRACKET

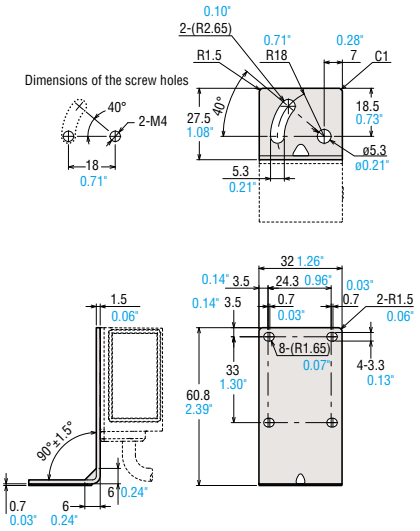

HEAD CABLE

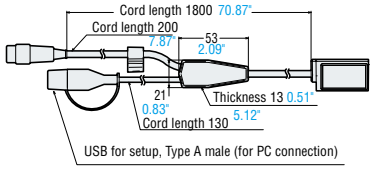

KEYENCE

CALL TOLL FREE | TO CONTACT YOUR LOCAL OFFICE 1-888-KEYENCE 1-888-539-3623

www.keyence.com

SAFETY INFORMATION
Please read the instruction manual carefully in order to safely operate any KEYENCE product.

CONTACT YOUR NEAREST OFFICE FOR RELEASE STATUS

KEYENCE CORPORATION OF AMERICA

Head Office 500 Park Boulevard, Suite 200, Itasca, IL 60143, U.S.A. **PHONE:** +1-201-930-0100 **FAX:** +1-855-539-0123 E-mail: keyence@keyence.com

AL Birmingham **AR** Little Rock **AZ** Phoenix **CA** San Francisco **CA** San Jose **CA** Cupertino **CA** Los Angeles **CA** Irvine **CO** Denver **FL** Tampa **GA** Atlanta **IA** Iowa **IL** Chicago **IN** Indianapolis **KY** Louisville **MA** Boston **MI** Detroit **MI** Grand Rapids **MN** Minneapolis **MO** Kansas City **MO** St. Louis **NJ** Elmwood Park **NY** Rochester **NC** Charlotte **NC** Raleigh **OH** Cincinnati **OH** Cleveland **OR** Portland **PA** Philadelphia **PA** Pittsburgh **SC** Greenville **TN** Knoxville **TN** Nashville **TX** Austin **TX** Dallas **WA** Seattle **WI** Milwaukee

KEYENCE CANADA INC.

Head Office PHONE: +1-905-366-7655 FAX: +1-905-366-1122 E-mail: keyencecanada@keyence.com
Montreal PHONE: +1-514-694-4740 FAX: +1-514-694-3206 Windsor PHONE: +1-905-366-7655 FAX: +1-905-366-1122

KEYENCE MEXICO S.A. DE C.V.

PHONE: +52-55-8850-0100 FAX: +52-81-8220-9097
E-mail: keyencemexico@keyence.com

The information in this publication is based on KEYENCE's internal research/evaluation at the time of release and is subject to change without notice.
Company and product names mentioned in this catalog are either trademarks or registered trademarks of their respective companies.
The specifications are expressed in metric units. The English units have been converted from the original metric units.
Copyright (c) 2017 KEYENCE CORPORATION. All rights reserved.